COMPACT UNIT

CODE 13123.C

Vandal proof compact unit



Does not include faucet

· AISI 304 stainless steel vandal proof compact unit including a toilet pan and a wash basin.
· Toilet pan located at the center of the unit.
· Designed for reduced areas.
· Designed for vandal proof areas. Internal backing which gives rigidity and do not allow to remove elements from insider.
· Equipment can be delivered with internal expanded polyurethane foam avoiding possibility to make noise and making the unit stronger.
· Recessed hole in the unit on the right side for toilet paper roll.

TECHNICAL DATA

· Made of AISI 304 stainless steel.
· Stainless steel plate thickness: 2 mm (frontal panel and bottom board), 1,2 mm (surround board and bowl), 1 mm (wash basin).
· Dimensions: 990 high x 355 width x 870 depth (mm). Back splash: 170 high (mm).
· Faucets not included. Available NOFER kit 07014.
· Distance from WC drain pipe to floor: 180 mm.
· Diameter: WC water inlet Ø 60 mm, WC outlet Ø 100 mm.
· Fixing material for installing through wall (bolts) included.
· Maintenance: stainless steel needs maintenance because dust can eventually damage the chrome in stainless steel. We recommend monthly cleaning with our special product.
· Recommended water pressure from 3 bar.

SUGGESTED TEXT FOR PRESCRIPTION

NOFER vandal proof compact unit made of AISI 304 stainless steel including a centeredtoilet pan and a wash basin. Toilet pan at the center. Dimensions: 990 high x 355 wide x 870 deep (mm).

NOFER S.L.
Ctra. Laureà Miró, 385-387
08980 · Sant Feliu de Llobregat (Barcelona)
Tel +34 934 742 423 · Fax +34 934 743 548
nofer@nofer.com · www.nofer.com

Related Products


13123.R


13124.L


13124.R


07014

TECHNICAL DRAWING

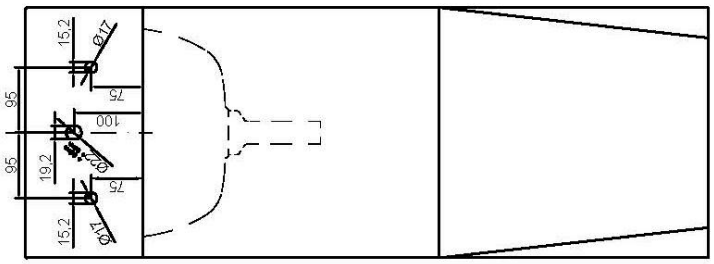

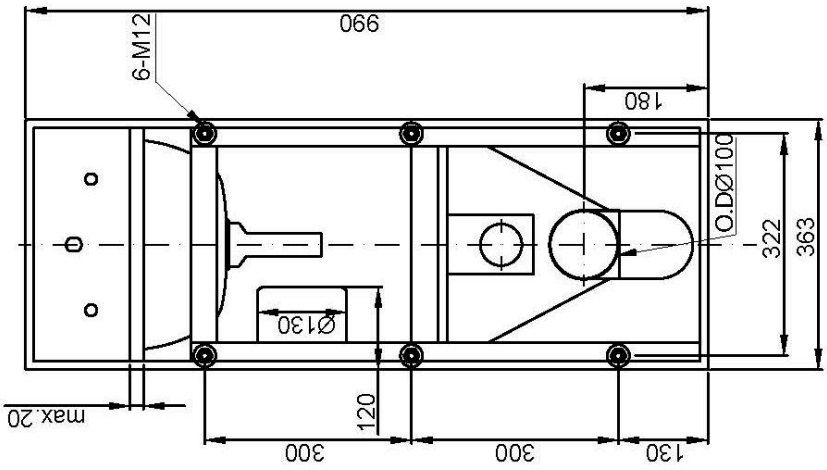

DIMENSIONS IN mm

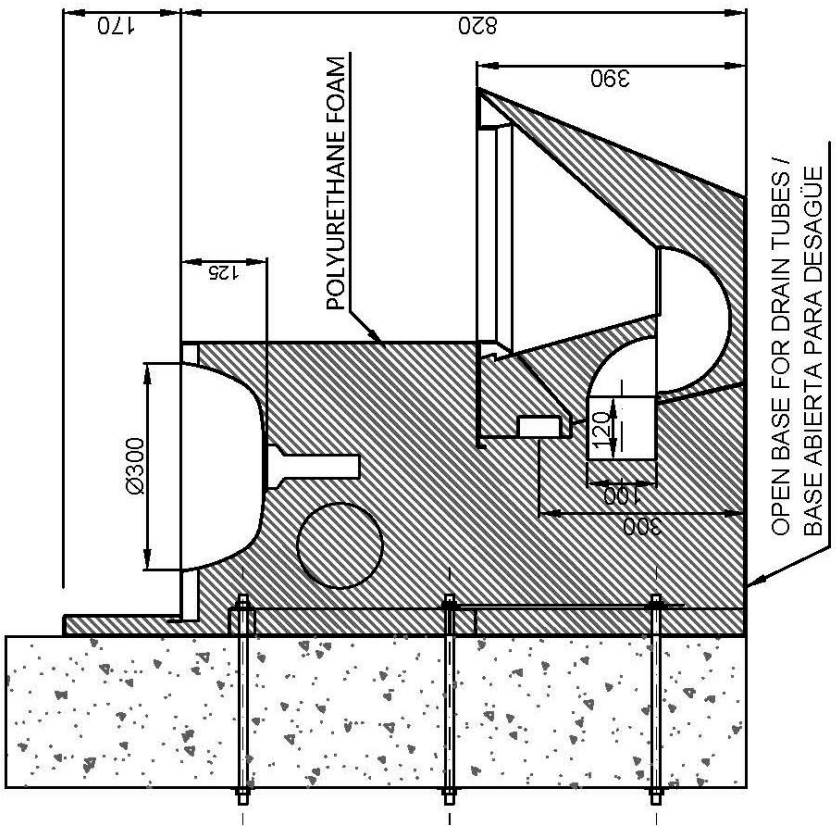

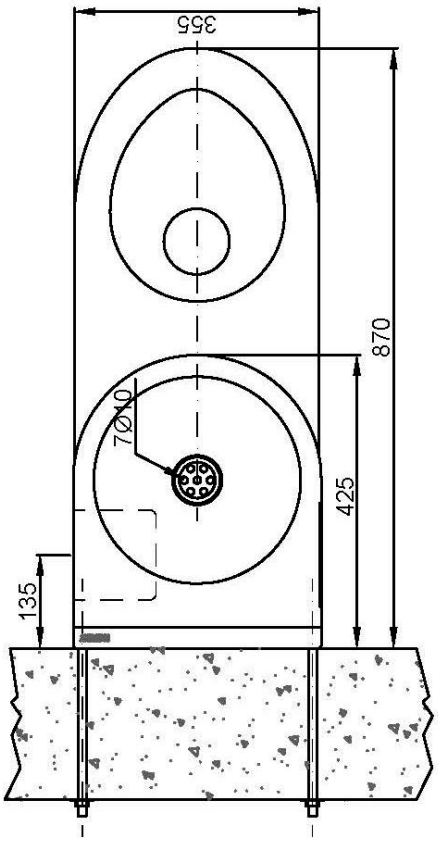

NOFER S.L.
Ctra. Laureà Miró, 385-387
08980 · Sant Feliu de Llobregat (Barcelona)
Tel +34 934 742 423 · Fax +34 934 743 548
nofer@nofer.com · www.nofer.com