# HOOK

CODE 09013.P.S

**Security hook**



- Stainless steel safety hook satin finish.
- Frontal mounting through 2 fixing points.
- Suitable for security places. If the hook is excessively loaded, it will snap down for safety.
- Resistance and durability.

## TECHNICAL DATA

- Made of stainless steel satin finished.
- Dimensions: 108 height x 108 width x 54 depth (mm).
- Screws included.
- Maintenance: stainless steel needs maintenance because dust can eventually damage the chromium (Cr) content in stainless steel. We recommend monthly cleaning with a stainless steel special cleaner.

## SUGGESTED TEXT FOR PRESCRIPTION

NOFER security hook made of stainless steel, satin finished.
Dimensions: 108 height x 108 width x 54 depth (mm).

## TECHNICAL DRAWING

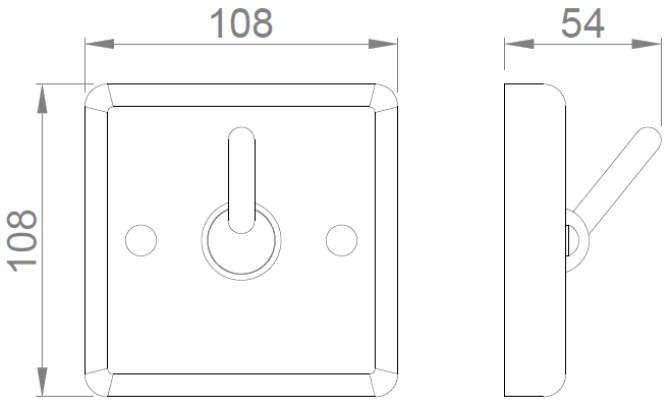


DIMENSIONS IN mm

NOFER S.L.
Avenida de la fama, 118
08940 · Cornellà de Llobregat (Barcelona)
Tel +34 934 742 423 · Fax +34 934 743 548
nofer@nofer.com · www.nofer.com

Related Products


09013.R.S


13004.P.S


13054.P


07082.B


13123.L

.0504 - These specifications can be modified and/or rectified due to manufacture requirements.